# Assembly Instruction

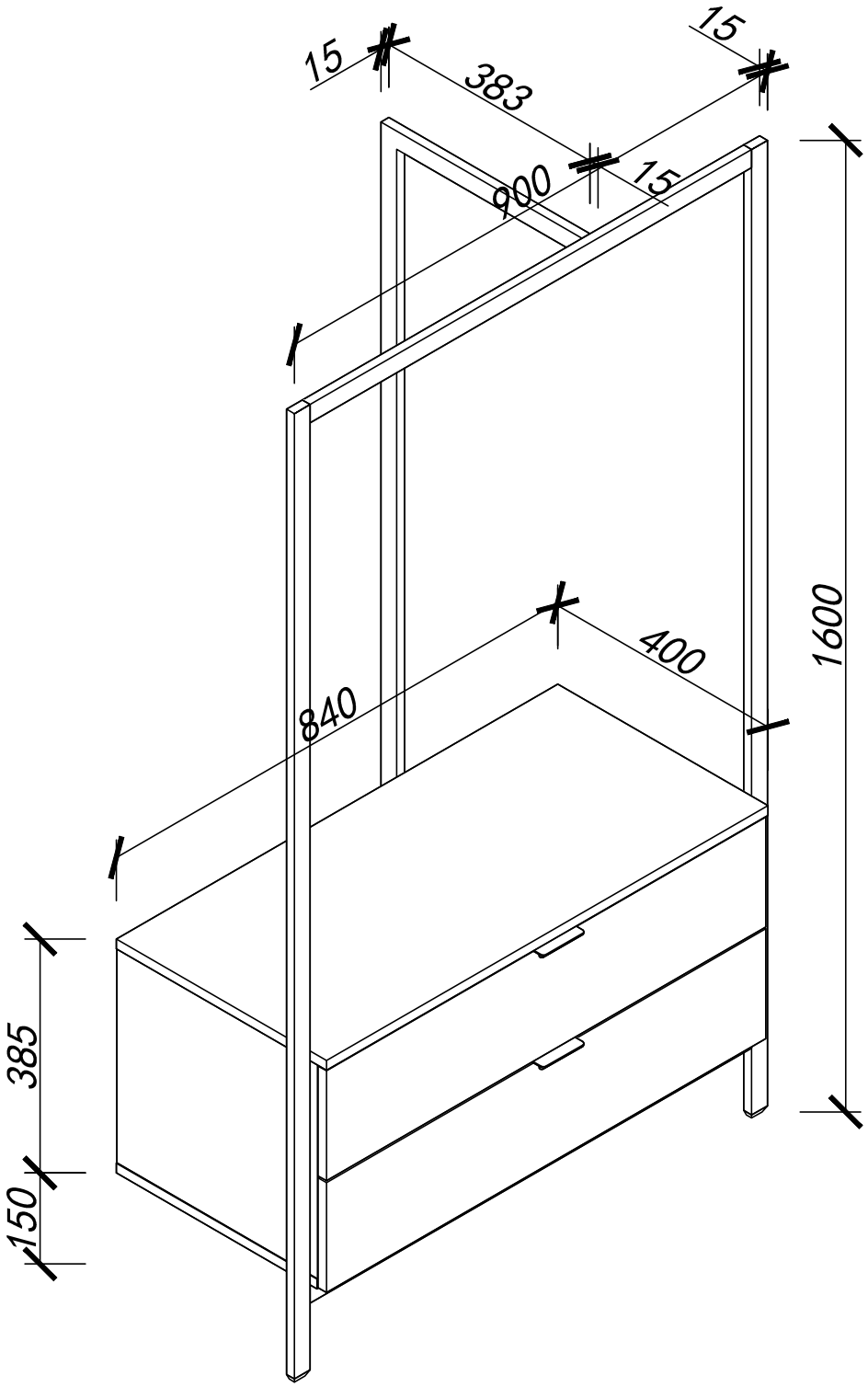

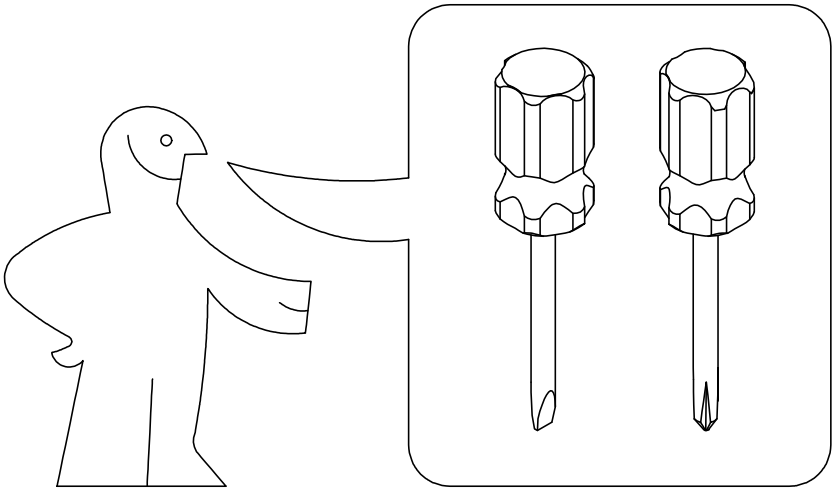

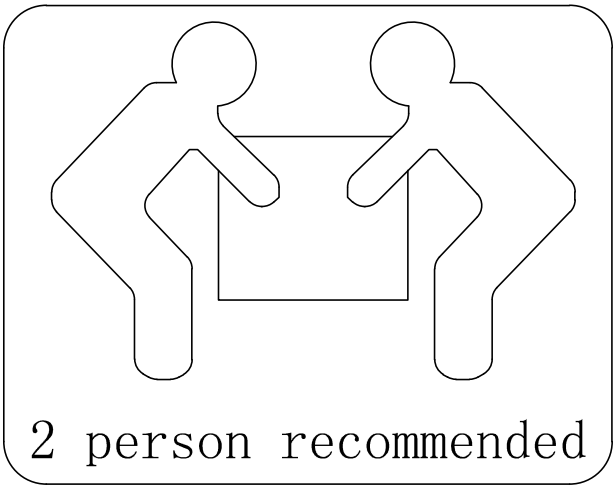
2 person recommended

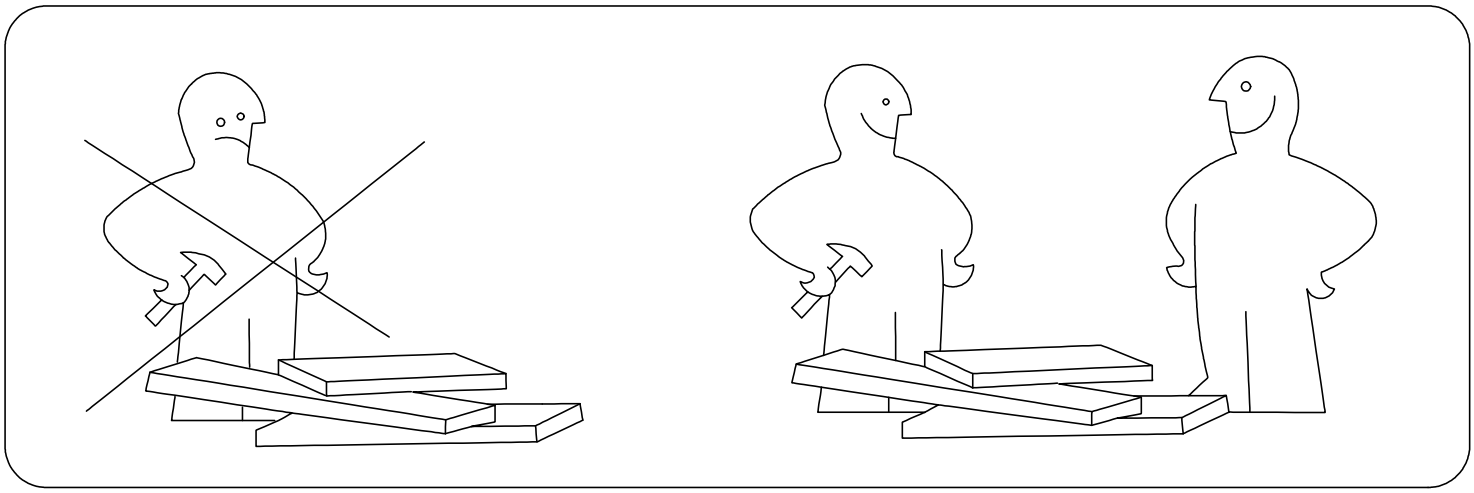

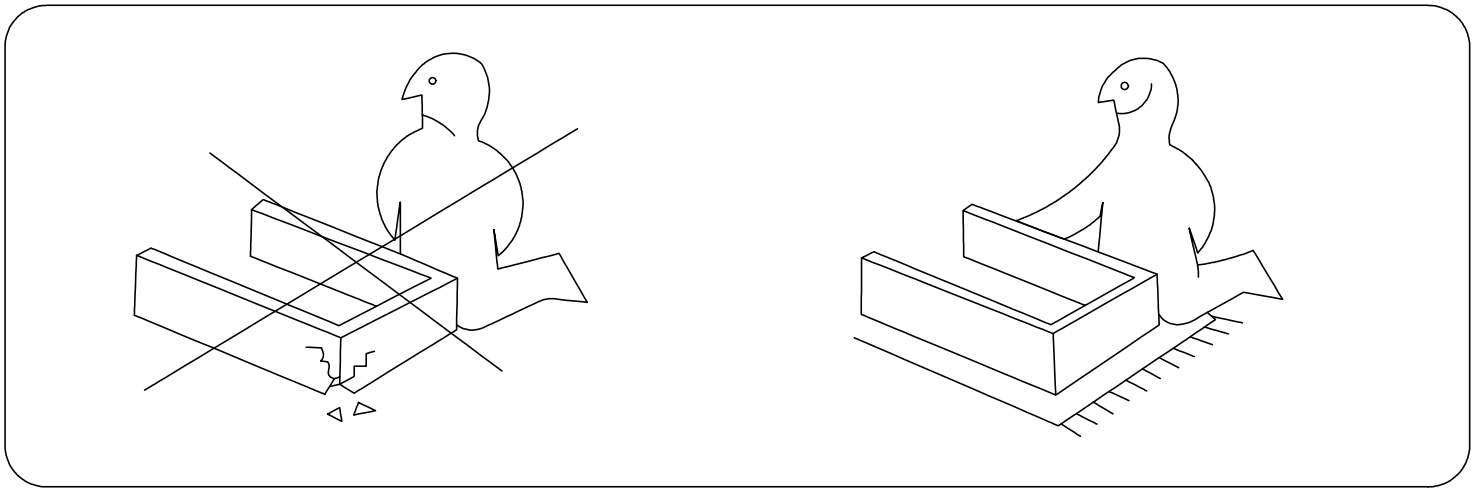

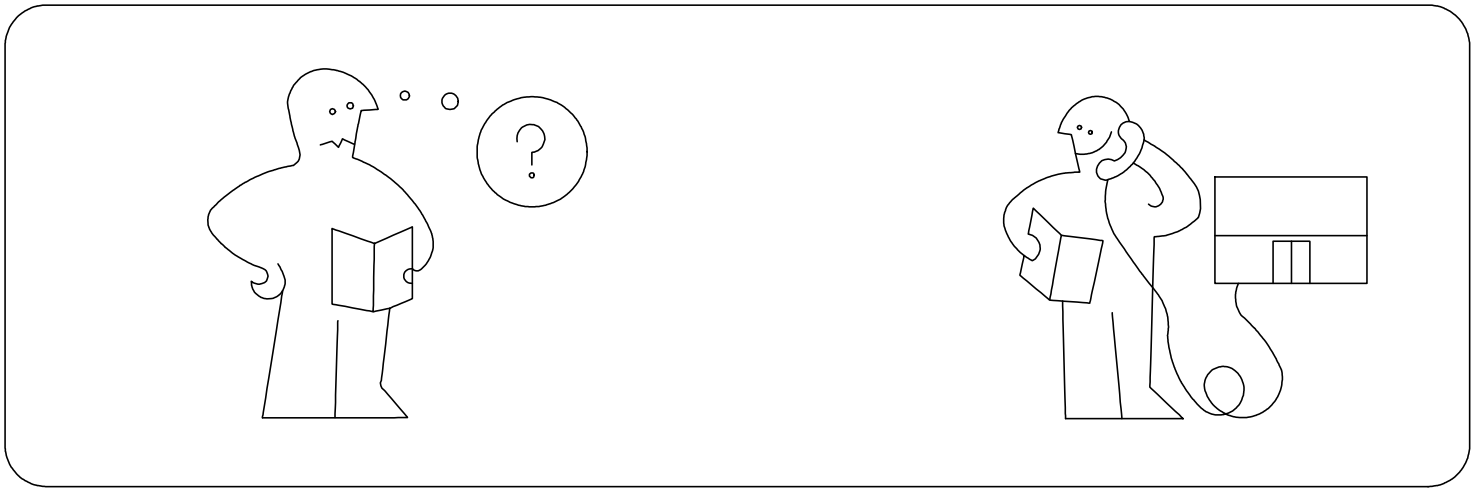
?

| Panel No | Panel Sizes | Quantity |
|---|---|---|
| 1 | 840*400*16 | 1 |
| 2 | 840*382*16 | 1 |
| 3 | 353*382*16 | 1 |
| 4 | 353*382*16 | 1 |
| 5 | 363*816*5 | 1 |
| 6 | 836*181*16 | 2 |

| Panel No | Panel Sizes | Quantity |
|---|---|---|
| 7 | 756*120*12 | 2 |
| 8 | 338*100*12 | 2 |
| 9 | 350*120*12 | 2 |
| 10 | 350*120*12 | 2 |
| 11 | 766*348*5 | 2 |
| | | |

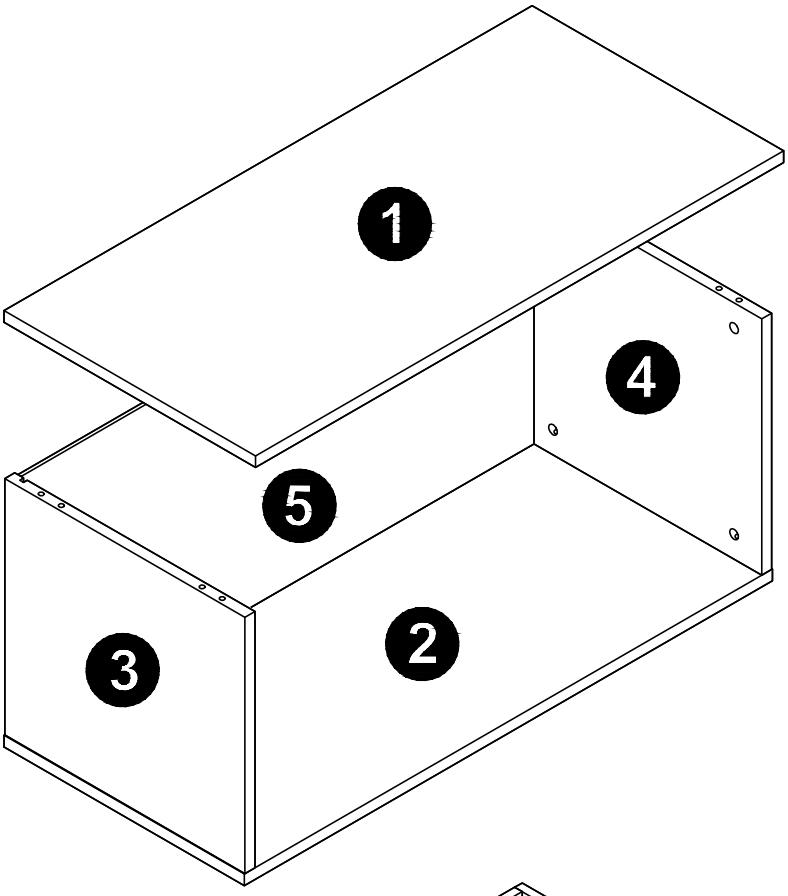


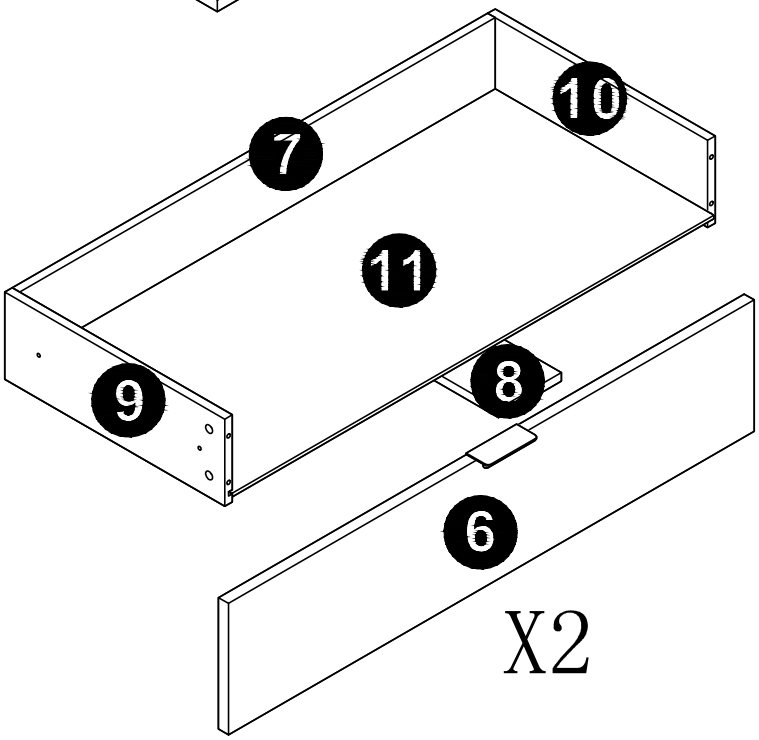


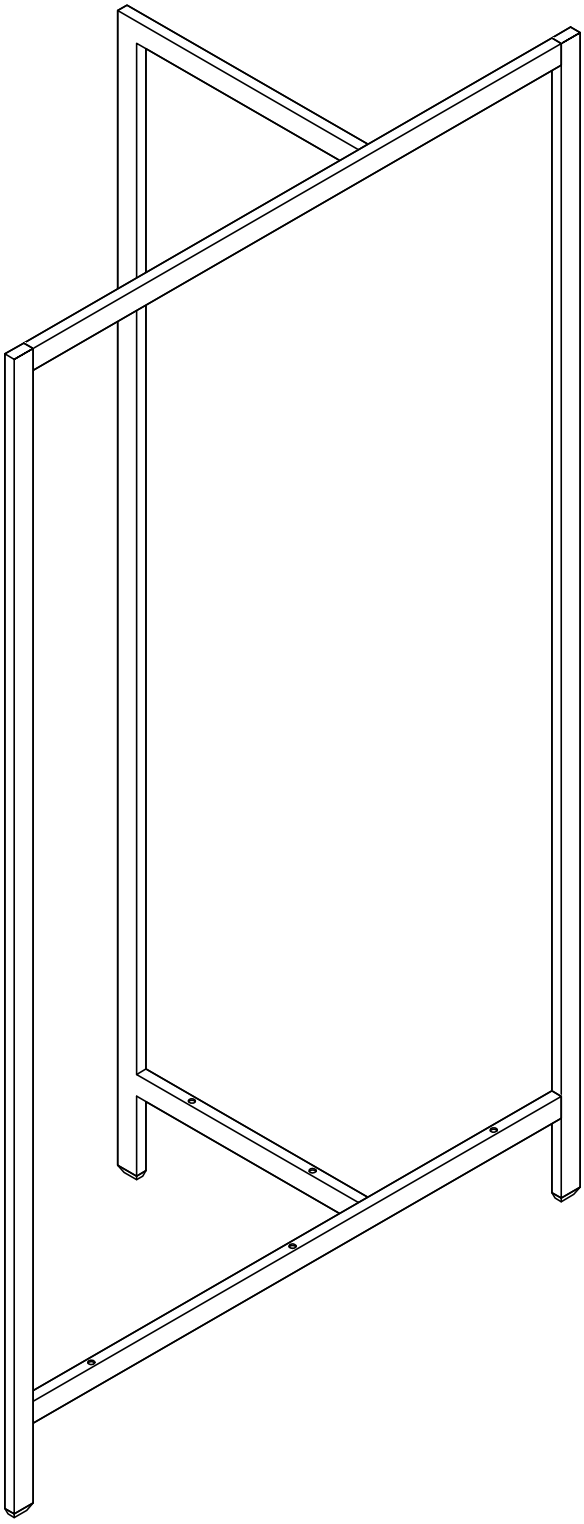

# Fittings

A=8

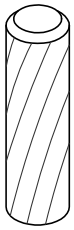

B=8

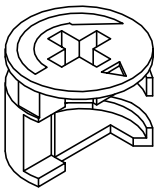

C=8

D1=8

D2=20

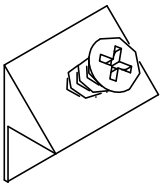

E=4

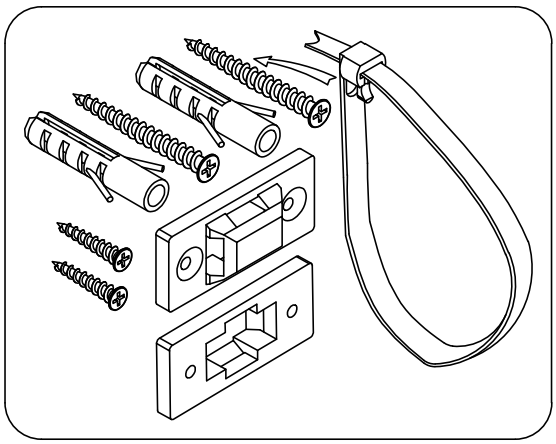

F=2

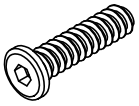

M6*12

G1=12

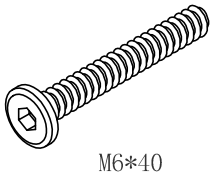

M6*40

G2=5

H=1

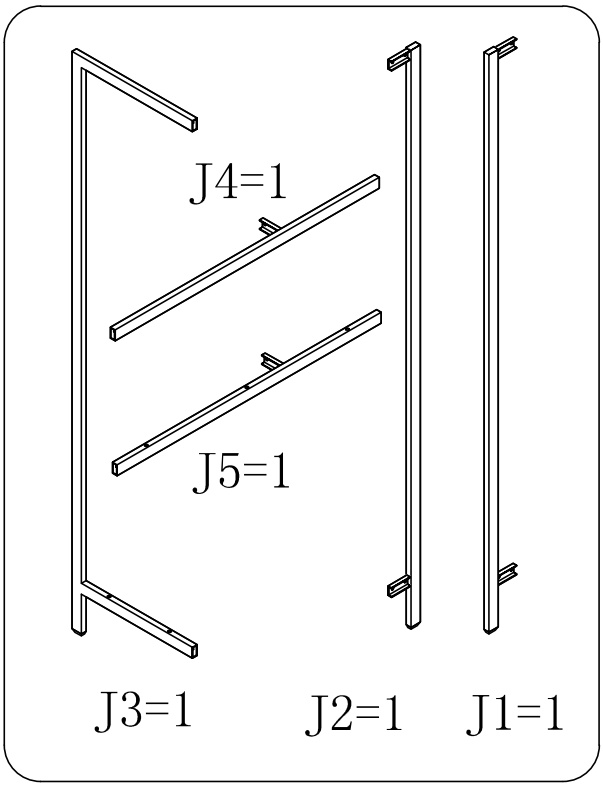


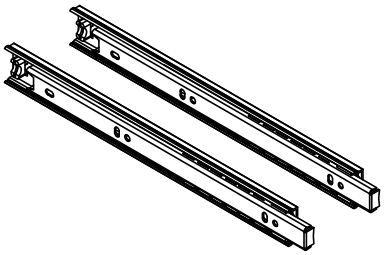

N=2

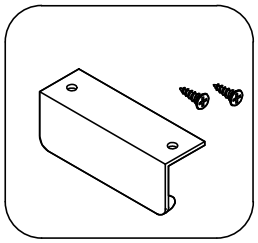

U=2

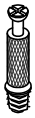

O=20

P=20

M3.5*12

V1=16

# STEP1

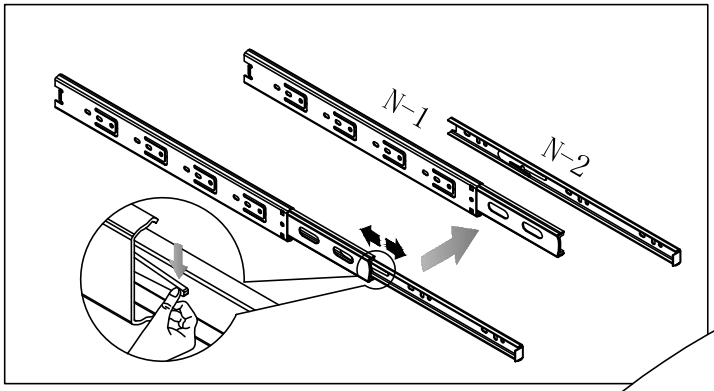


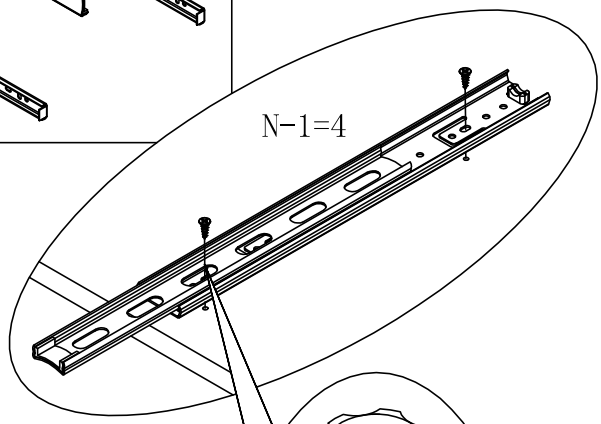


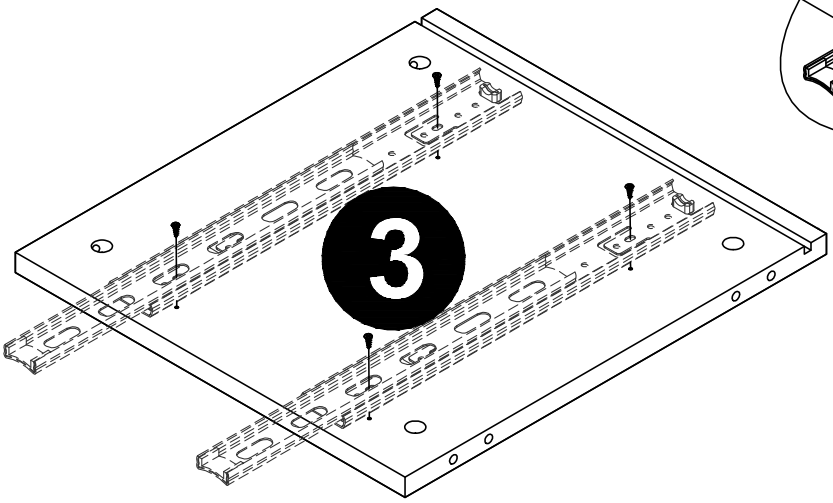


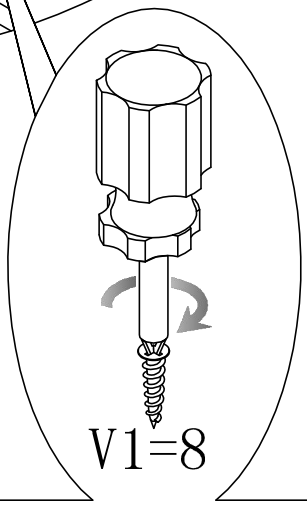


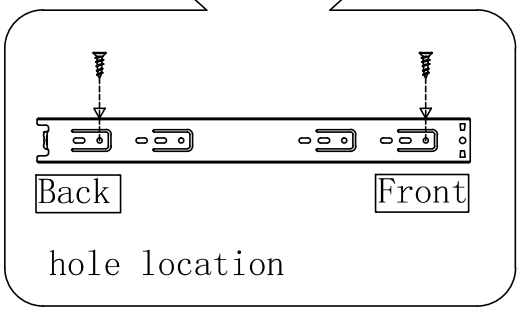


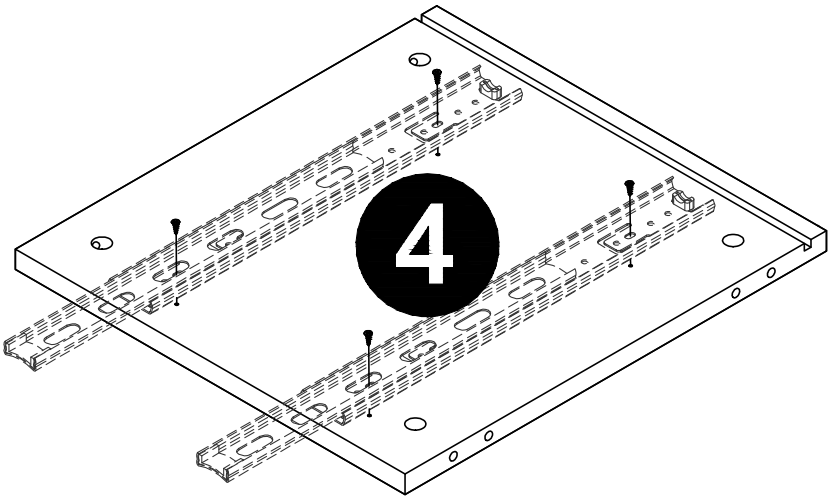

# STEP2

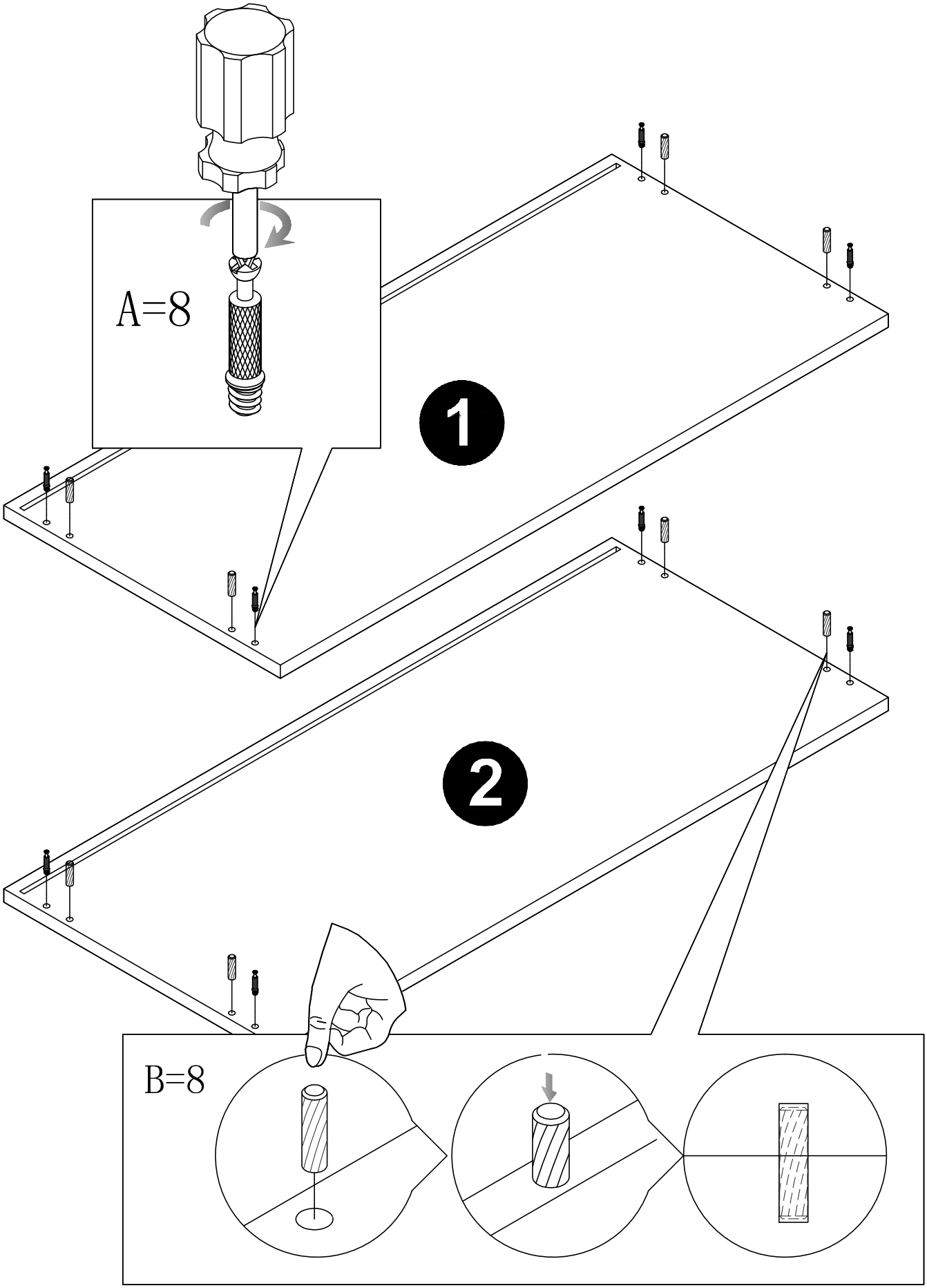

# STEP3

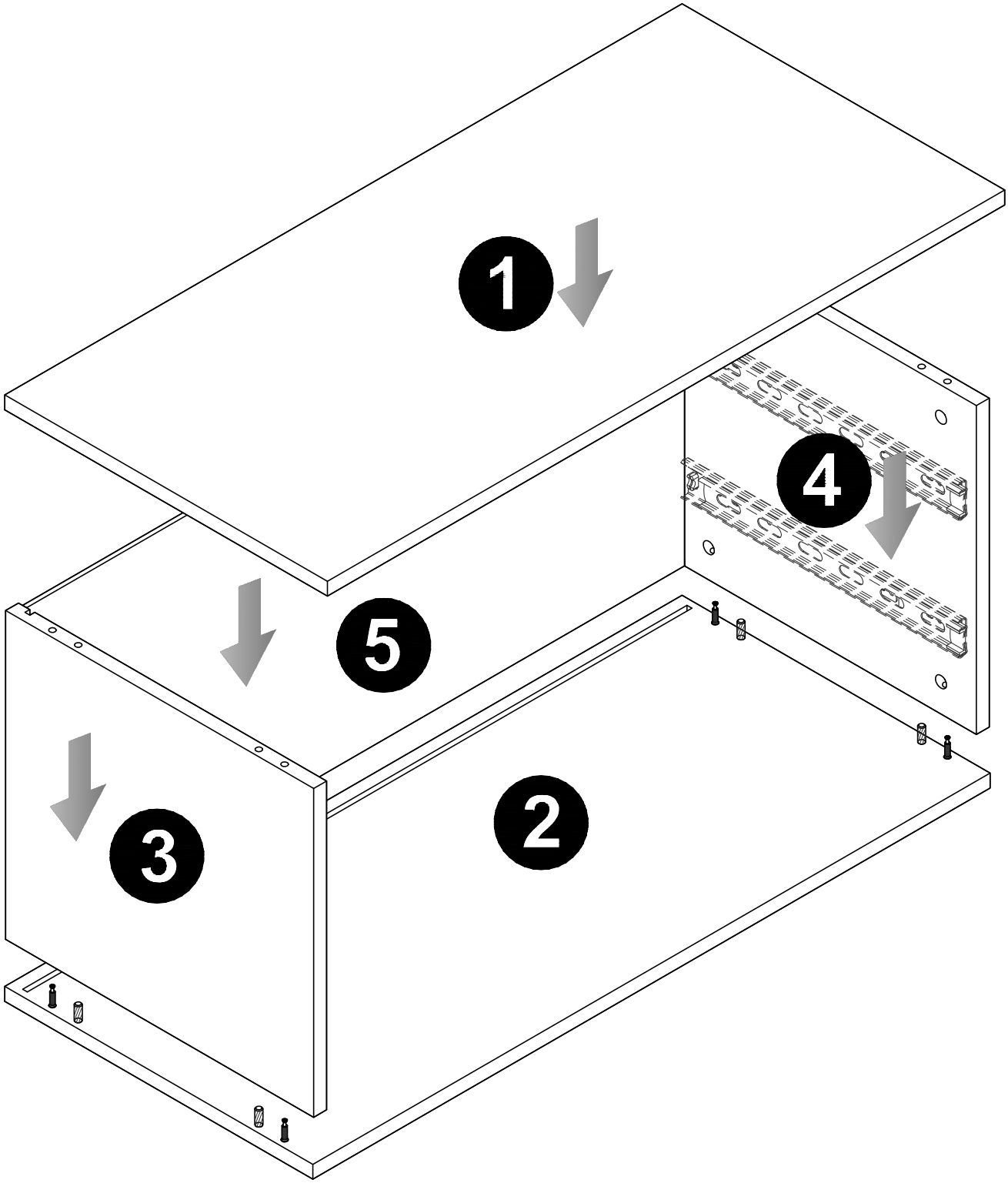

# STEP4

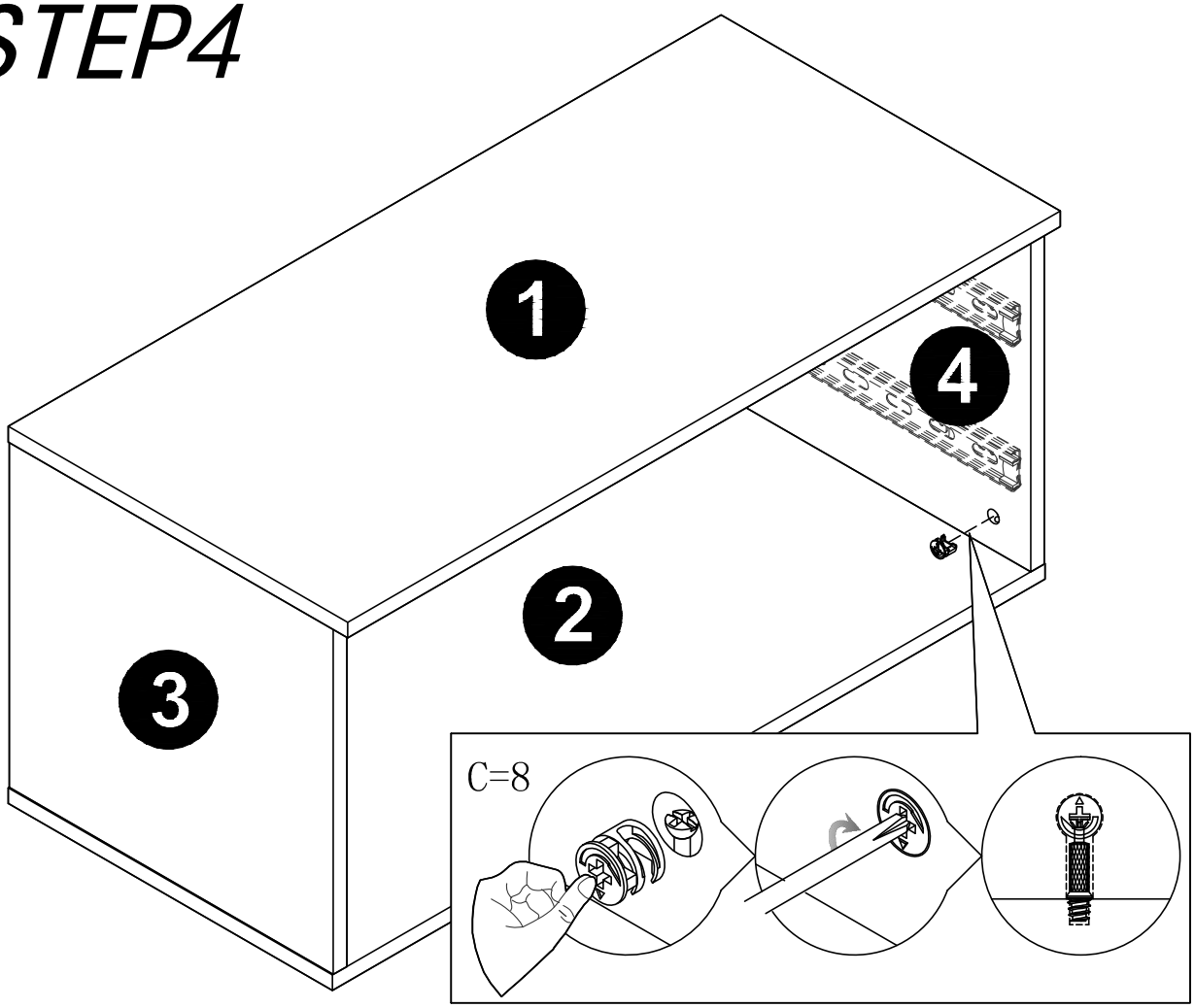


# STEP5

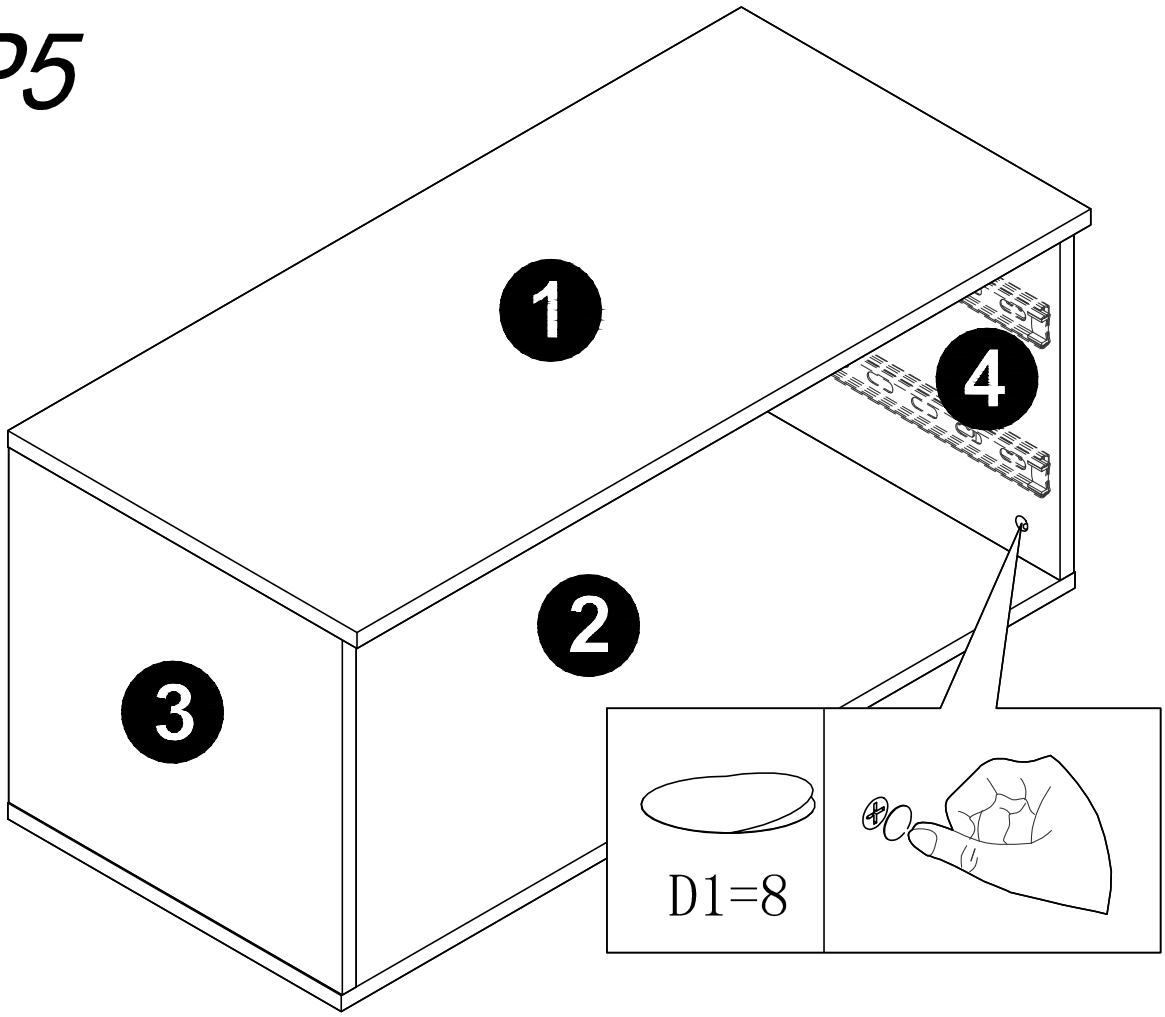

# STEP6

6-1

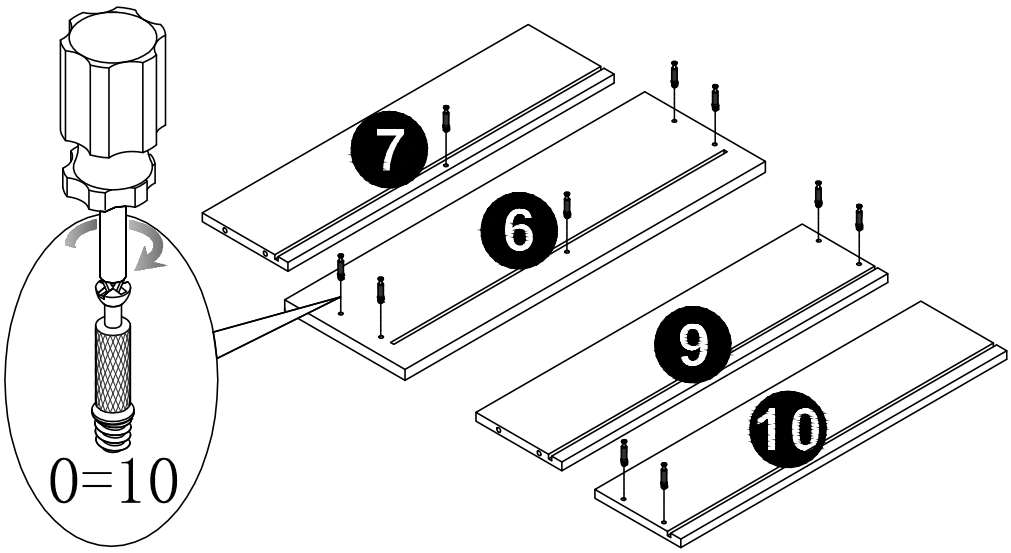


6-2

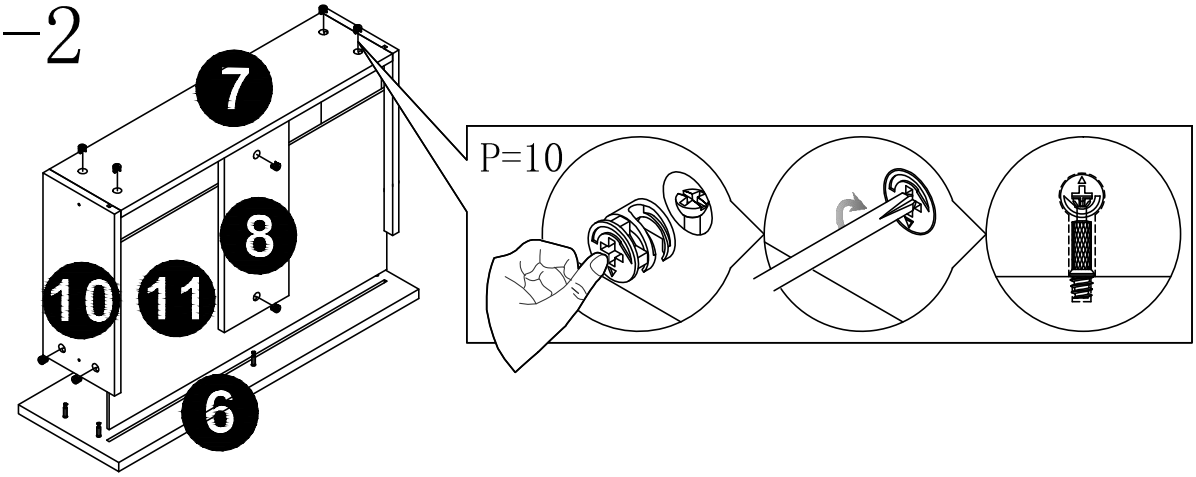


6-3

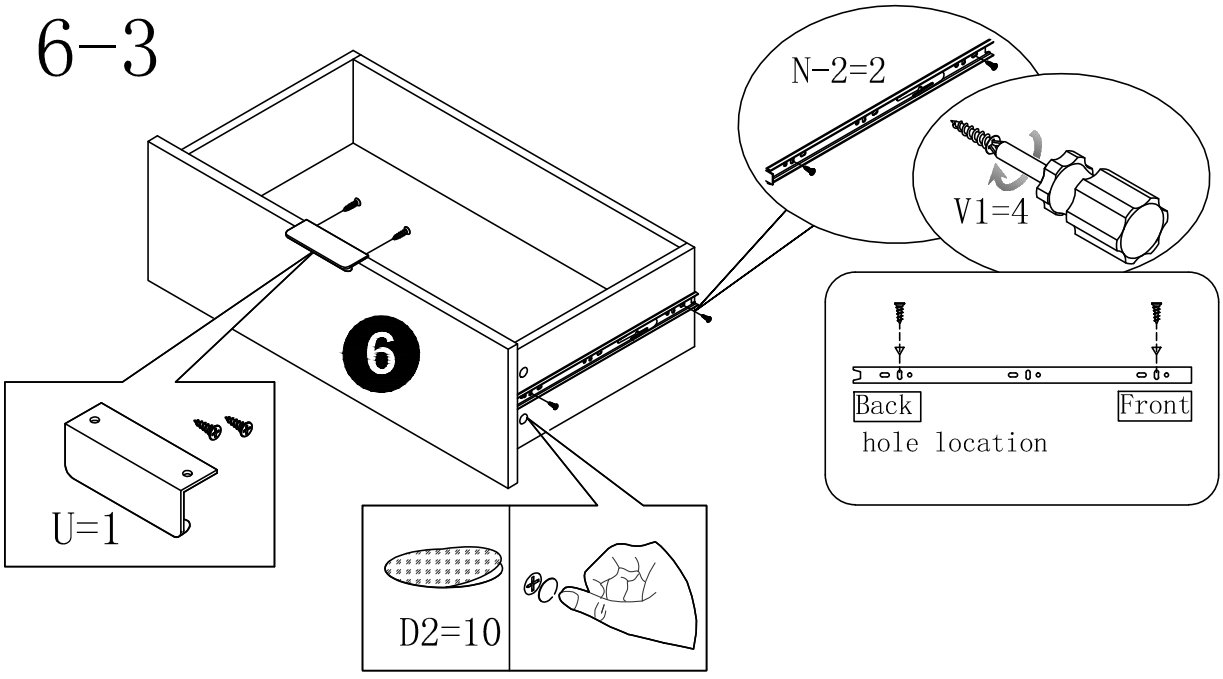


X2

# STEP7

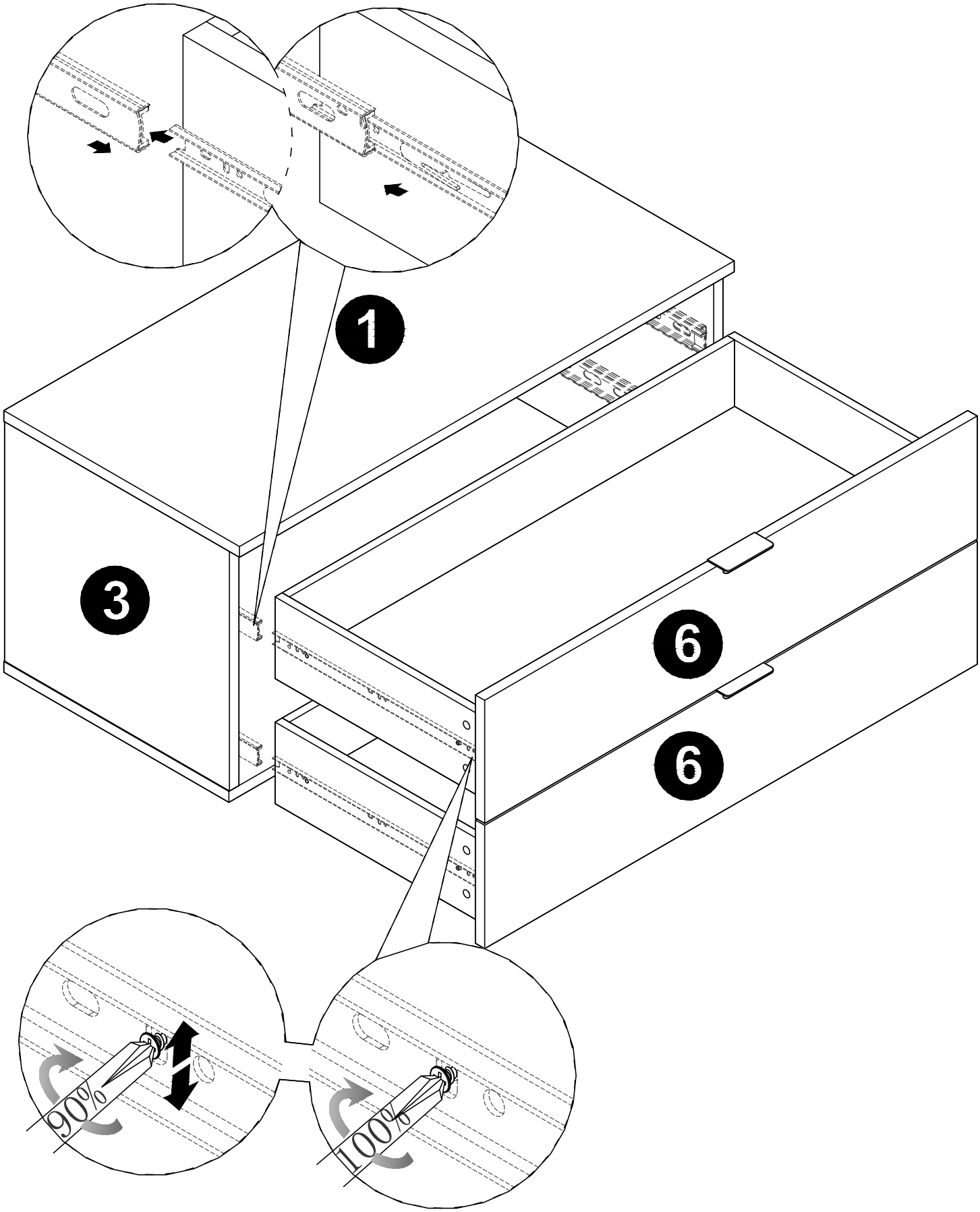

# STEP8

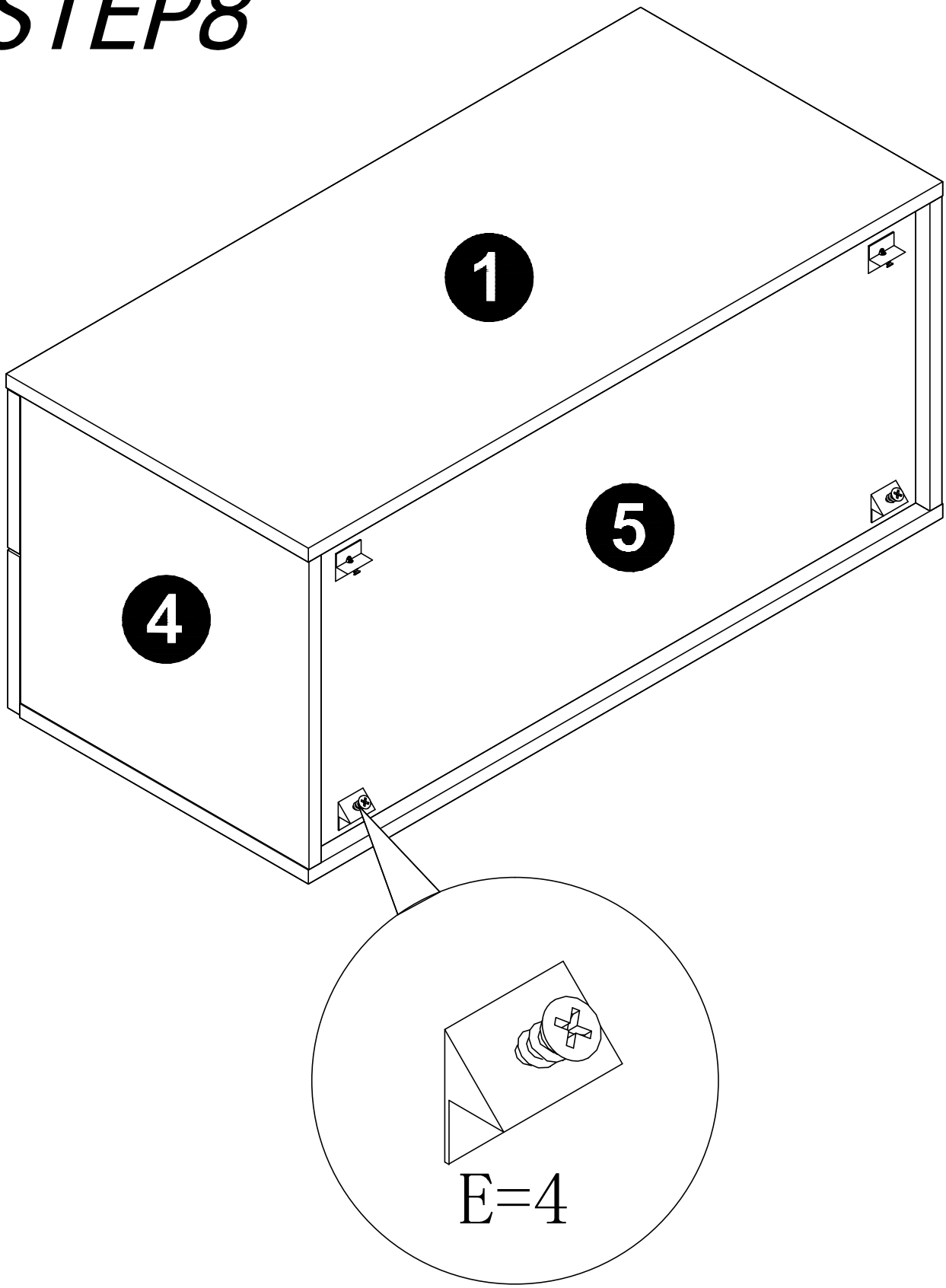

# STEP9

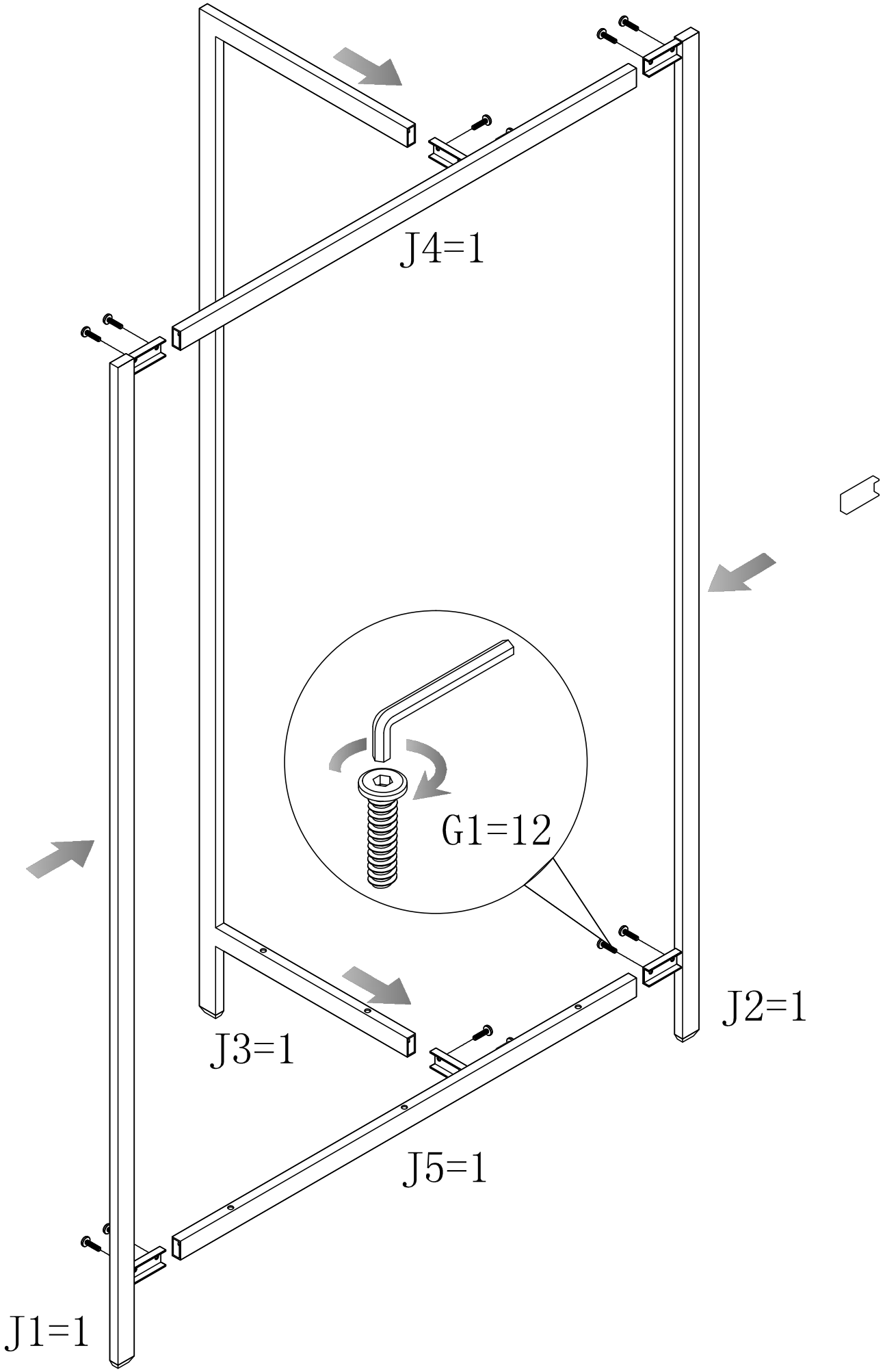

# STEP10

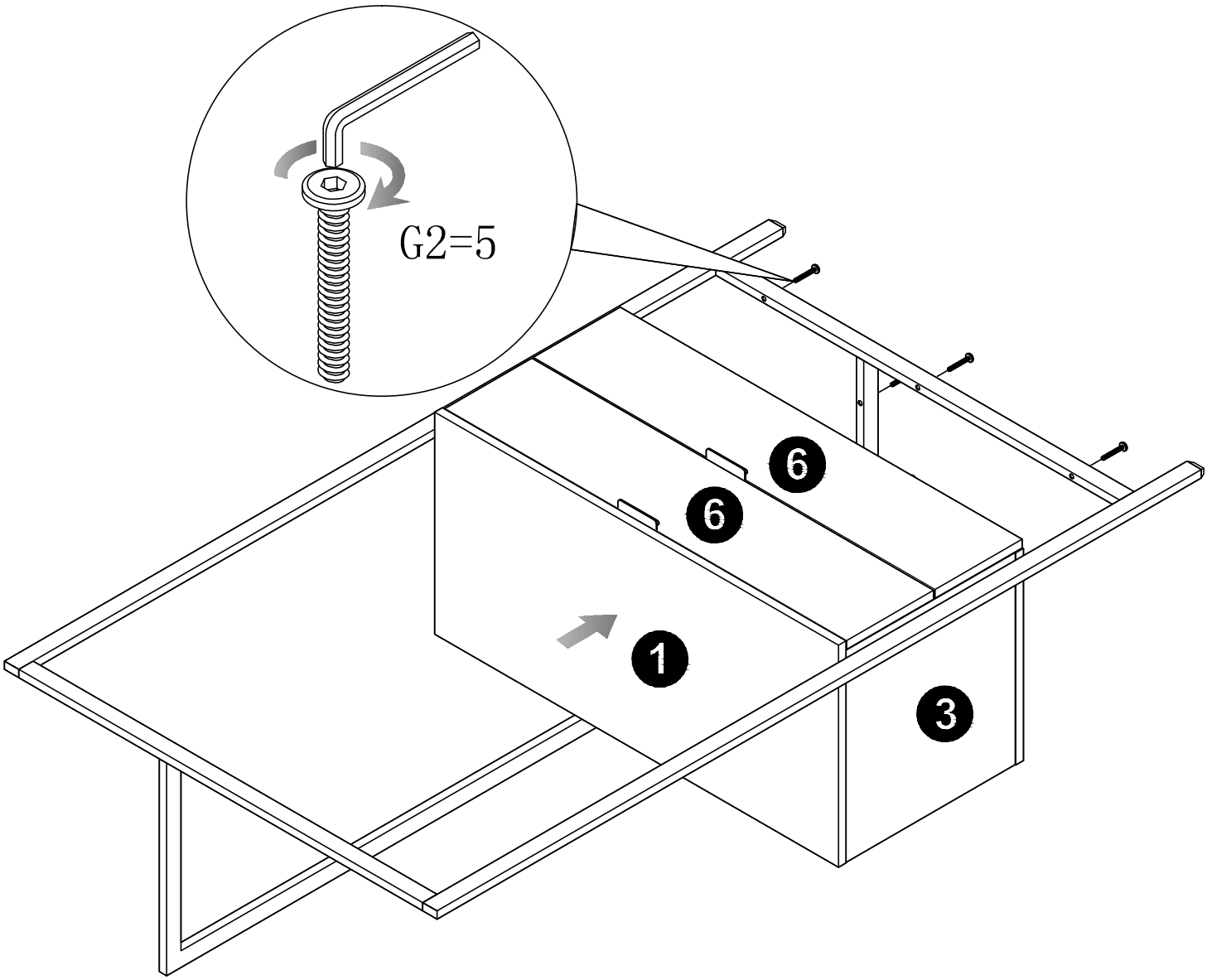

# STEP11

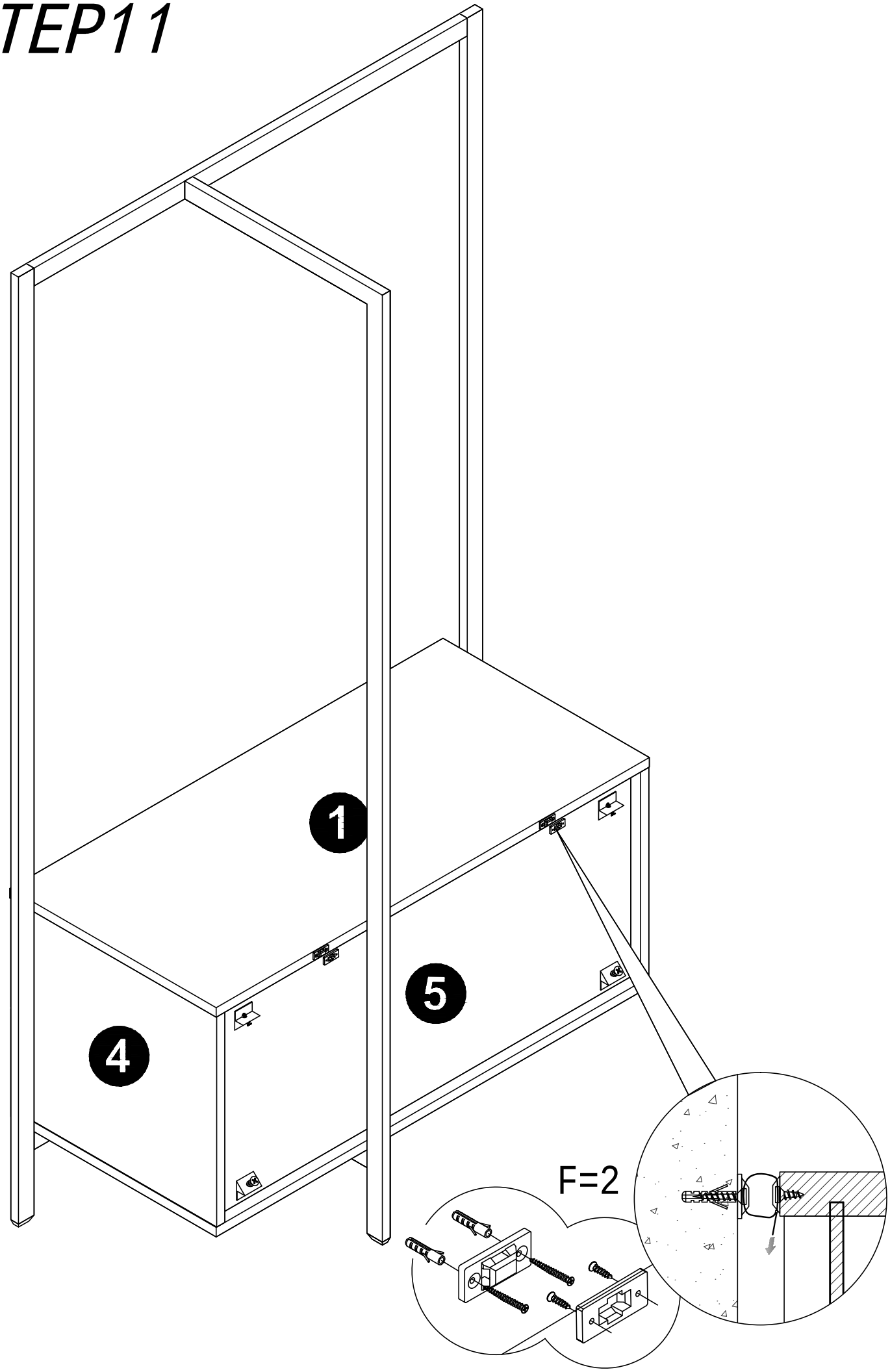

# STEP12

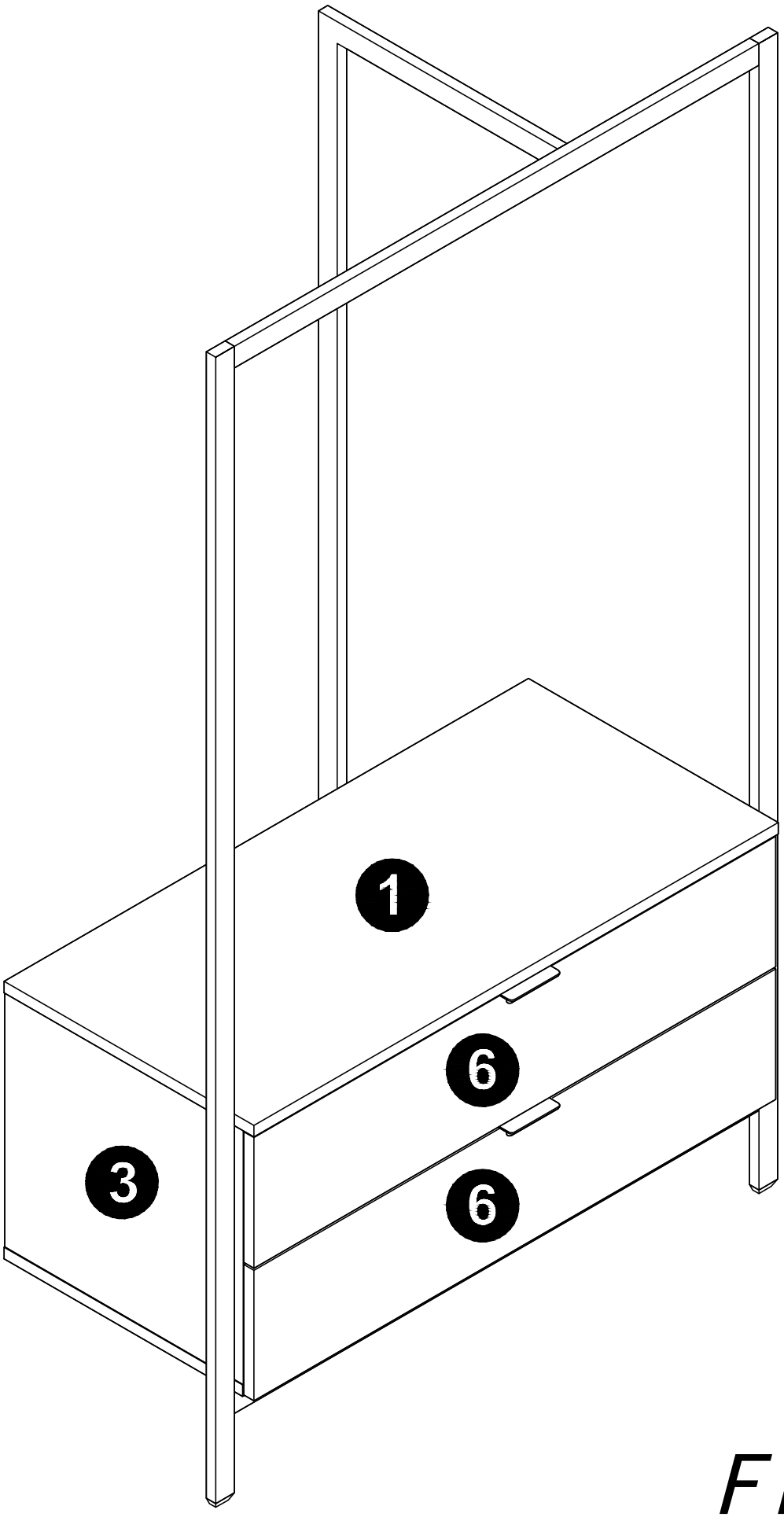


# FINISH

# 诺娃双抽柜三胺邮购包装

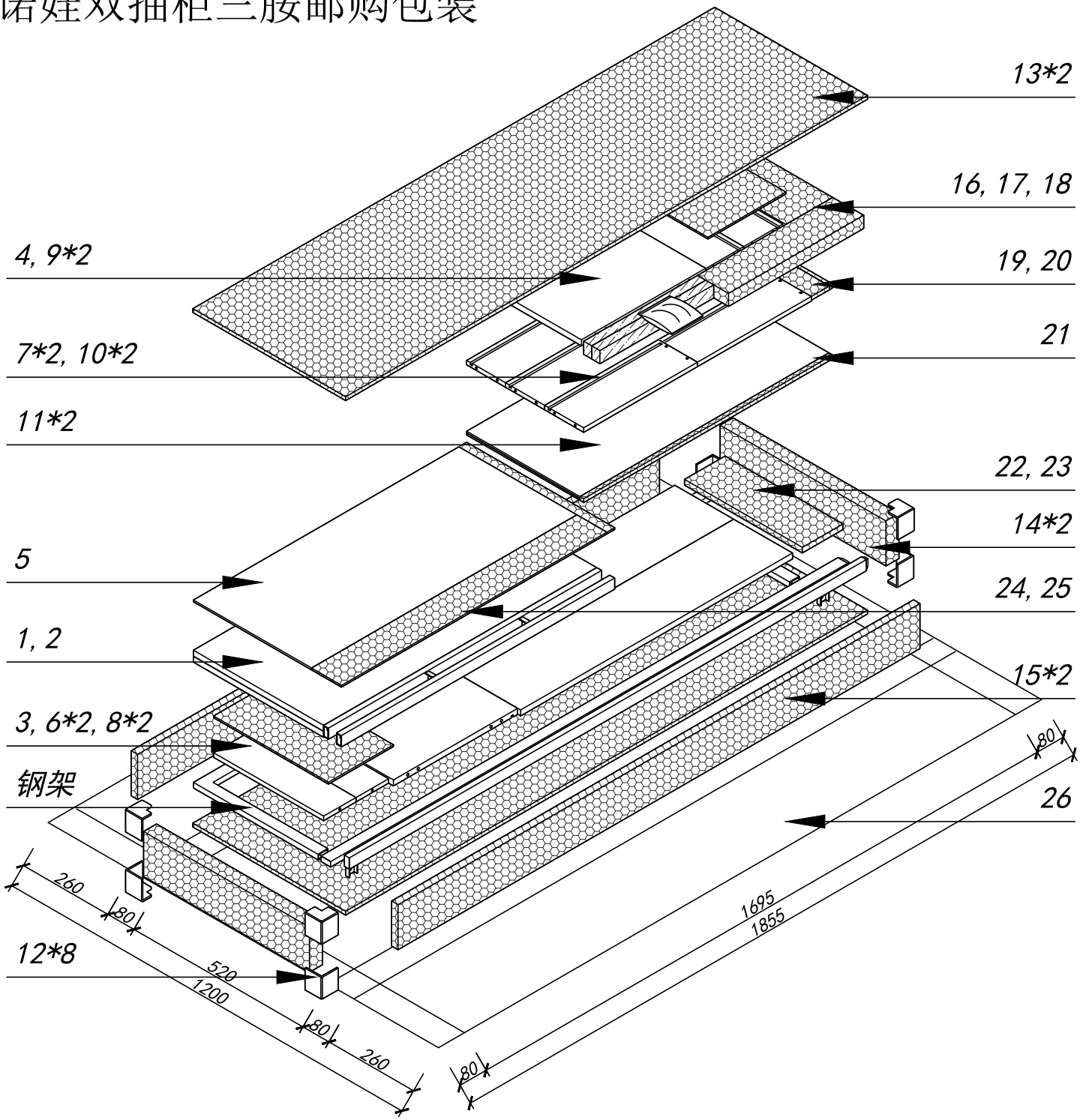


| Panel No | | Panel Sizes | Quantity |
|---|---|---|---|
| 12 | 护角 | 50*50*40 | 8 |
| 13 | 泡沫 | 1605*470*10 | 2 |
| 14 | 泡沫 | 510*70*40 | 2 |
| 15 | 泡沫 | 1605*70*20 | 2 |
| 16 | 泡沫 | 416*95*35 | 1 |
| 17 | 泡沫 | 360*144*15 | 1 |
| 18 | 泡沫 | 360*240*5 | 1 |
| 19 | 泡沫 | 360**10*10 | 1 |
| 20 | 泡沫 | 120*56*10 | 1 |

| Panel No | | Panel Sizes | Quantity |
|---|---|---|---|
| 21 | 泡沫 | 766*12*10 | 1 |
| 22 | 泡沫 | 362*125*15 | 1 |
| 23 | 泡沫 | 362*200*5 | 1 |
| 24 | 泡沫 | 455*24*5 | 1 |
| 25 | 泡沫 | 816*92*5 | 1 |
| 26 | 纸盒 | 内径1695*520*80 | 1 |
| | | | |
| | | | |
| | | | |